Primelite Manufacturing Corp

407 S Main St, Freeport, NY 11520
Phone: 516-868-4411 | Fax: 516-868-4609
sales@primelite-mfg.com | www.primelite-mfg.com

PART #	LAMP	VOLTAGE	COLOR
#5772/855-11 ESW LED 50	Built-In LED	120 - 277 V	Powder Coated Paint
JOB NAME			TYPE: Linear Sign Light

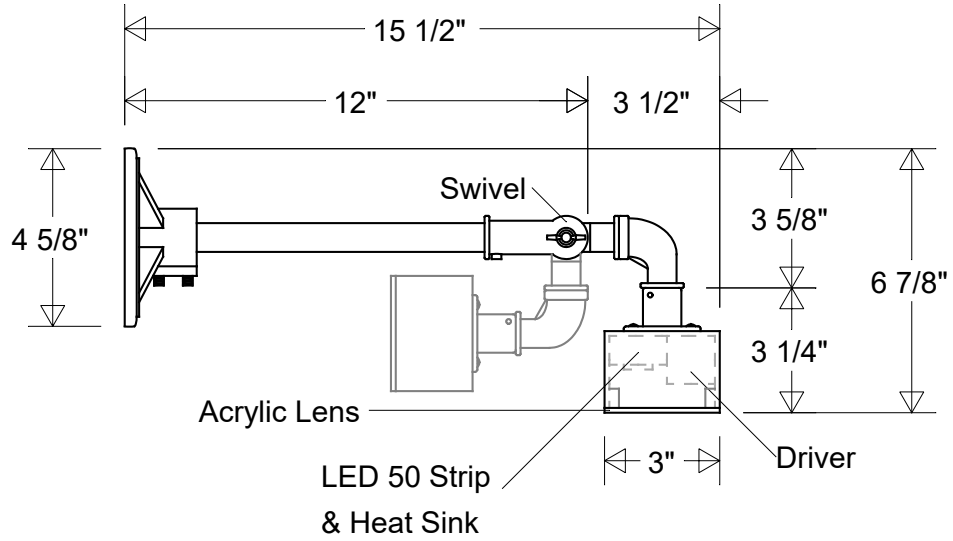

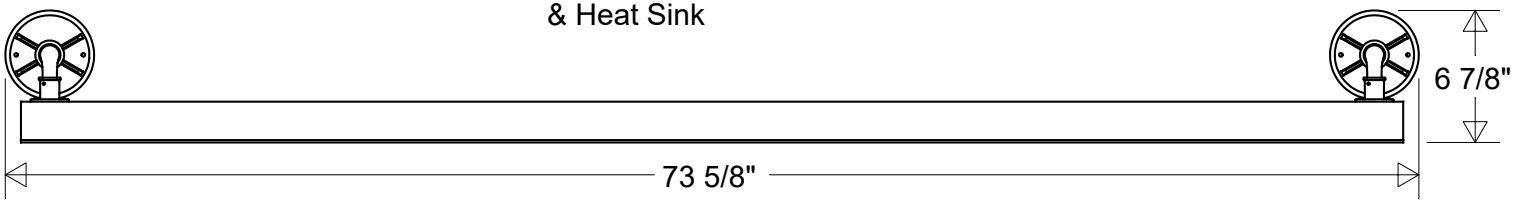

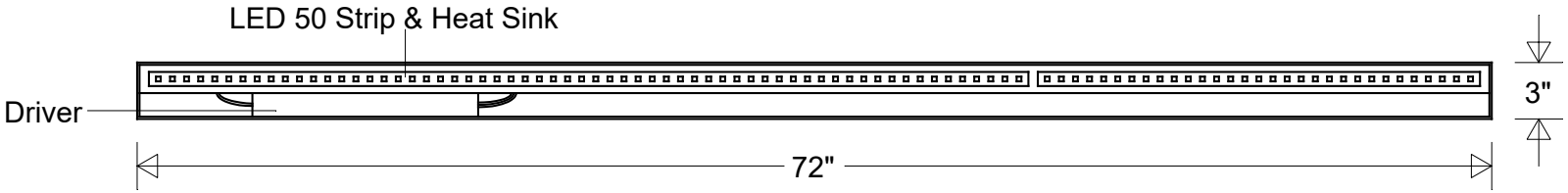

		Initials	Date	
Lamp: LED 50 Strip 35K = 7795 Lumens 5K = 7795 Lumens	Drawn	CB	09/2023	**#5772/855-11 ESW LED 50**
	Checked			73 5/8" L | 15 1/2" Ext | 6 7/8" H | 69" Center to Center Arms
	ENG Appr.			Acrylic Lens: White (-3) | Clear (-4) | Frosted (-5)
Construction: **Aluminum | Acrylic**	MFR Appr.			Size: **A** · Drawing No.: **0001** · Rev: **A**
	QA			
Unless Otherwise Specified: Dimensions in Inches	Weight:			Scale · CAD File · Sheet: **1 of 1**

Revisions

Zone	Rev	Description	Date	Appr