Primelite Manufacturing Corp.

407 S Main St, Freeport, NY 11520
Phone: (516) 868-4411 | Fax: (516) 868-4609
sales@primelite-mfg.com | www.primelite-mfg.com

PROUDLY MADE IN THE USA SINCE 1962!
"SPECIALTIES ARE OUR SPECIALTY!"

Job Info

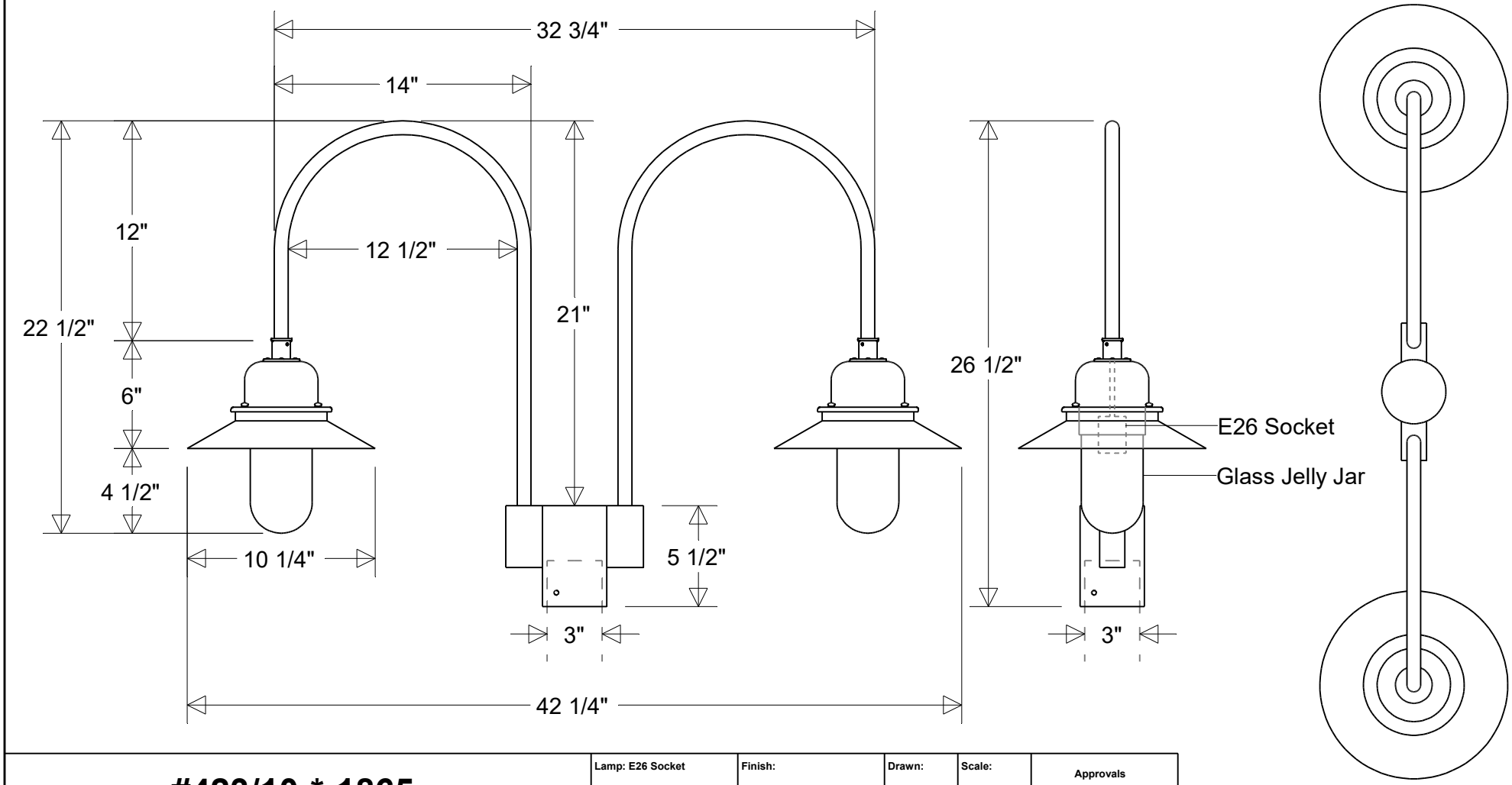

#423/10-*-1865

10 1/4" Dia | 42 1/4" Ext | 26 1/2" H | Fits 3" Posts

Jelly Jar: Clear (*4) | Prismatic (*4P) | Frost (*5)

Lamp: E26 Socket	Finish:	Drawn:	Scale:	Approvals
Max Wattage: 100 W	29 Oven Baked	CB	1/8	
Number of Sockets: 2	Powder Coated Paints	05/2025		
Voltage:	**Material:**	**Note:**		
120 V	Aluminum	All dimensions are nominal.		
	Glass Jelly Jar	Actual dimensions may vary.		