Primelite Manufacturing Corp.

407 S Main St, Freeport, NY 11520
Phone: (516) 868-4411 | Fax: (516) 868-4609
sales@primelite-mfg.com | www.primelite-mfg.com

PROUDLY MADE IN THE USA SINCE 1962!
"SPECIALTIES ARE OUR SPECIALTY!"

Job Info

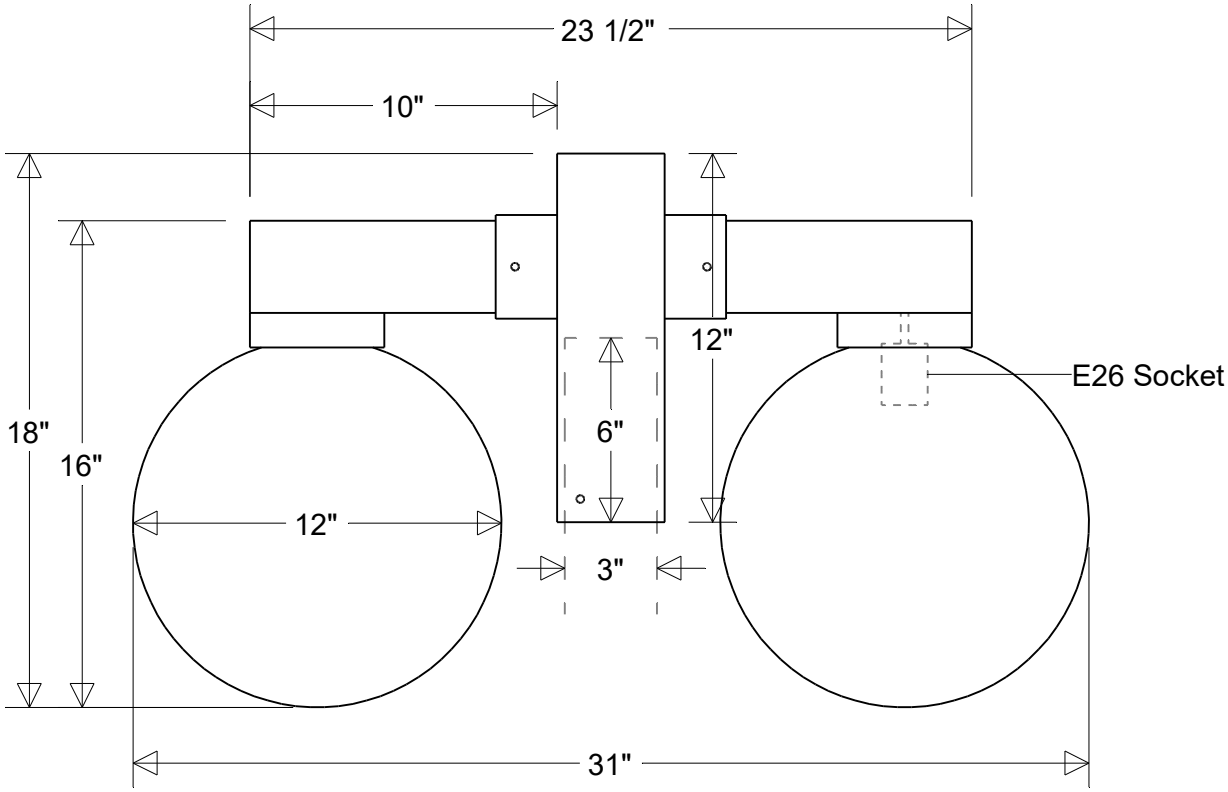

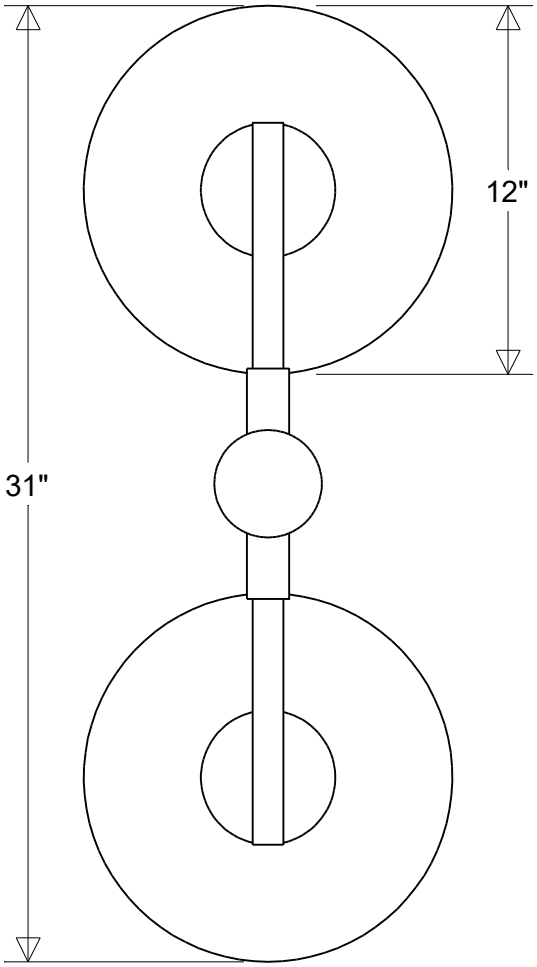

#1472 T2	**Lamp: E26 Socket** Max Wattage: 150 W Number of Sockets: 2	**Finish:** 29 Oven Baked Powder Coated Paints	**Drawn:** CB 01/2025	**Scale:** 1/6.25	**Approvals**
12" Dia | 31" Ext | 18" H | Fits 3" Posts White Polyethylene Globes	**Voltage:** 120 V	**Material:** Aluminum Polyethylene Globe	**Note:** All dimensions are nominal. Actual dimensions may vary.		