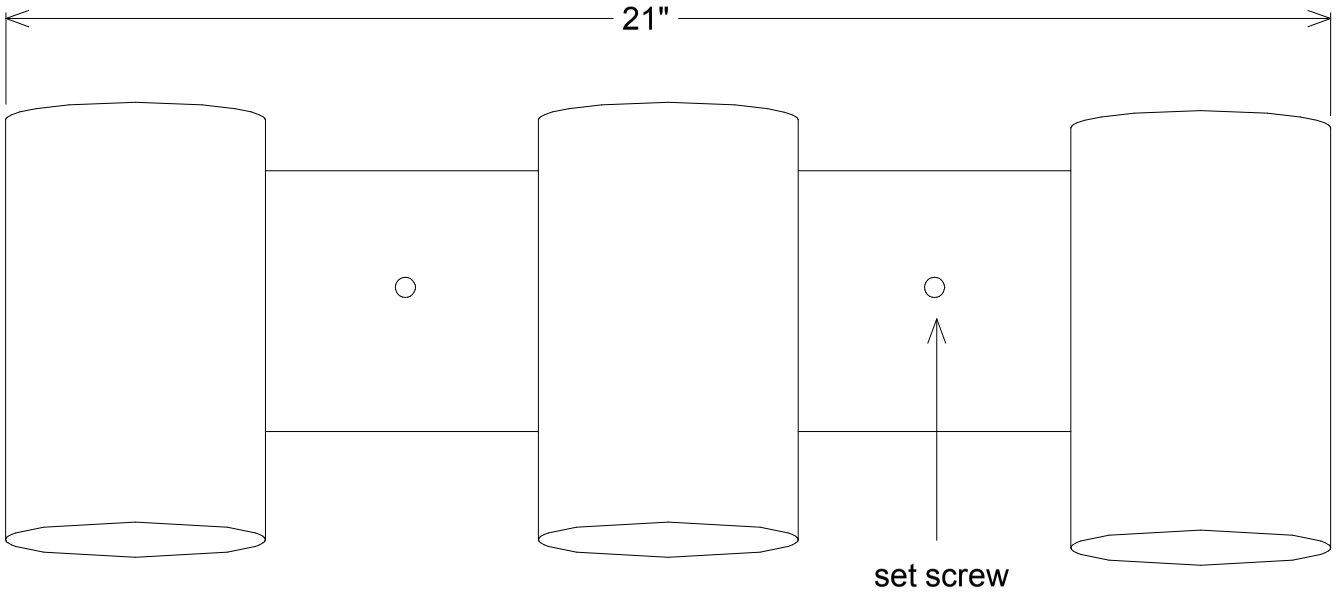

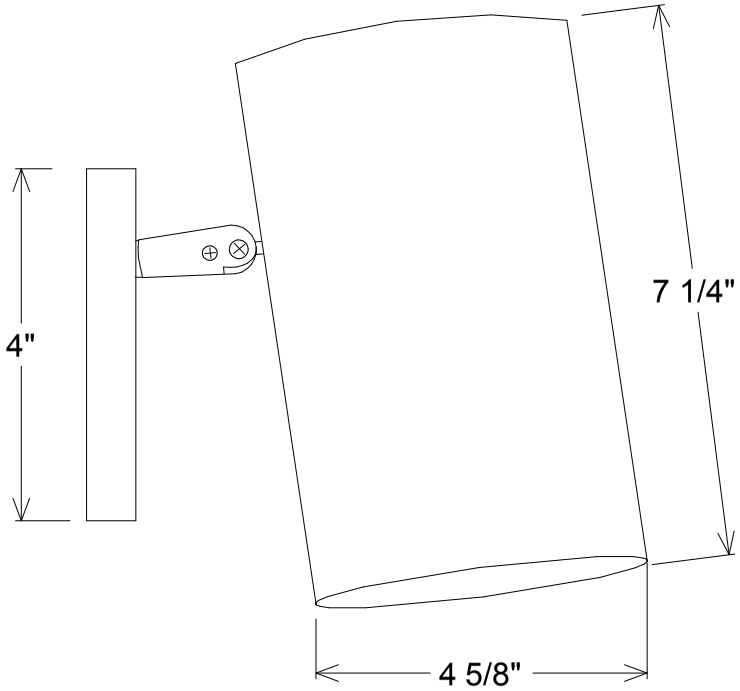

Unless Otherwise Specified:

Dimensions in Inches
Tolerances: Fractional ±
Angular: Mach ± Bend ±
Two Place Decimal ±
Three Place Decimal ±

Construction: All Aluminum

Lamp: 3-75A

	Name	Date
Drawn	T.A.R.	09/16/10
Checked		
ENG Appr.		
MFR Appr.		
QA		

Comments

CAD Generated Drawing
Do Not Manually Update

Primelite Mfg. Corp.

58-543

Size	Drawing No.	Rev
A	0001	A

Scale	CAD File	Sheet
		1 of 1