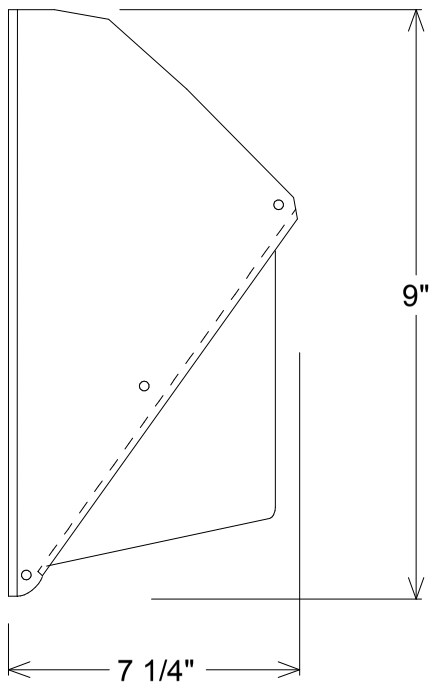

side view

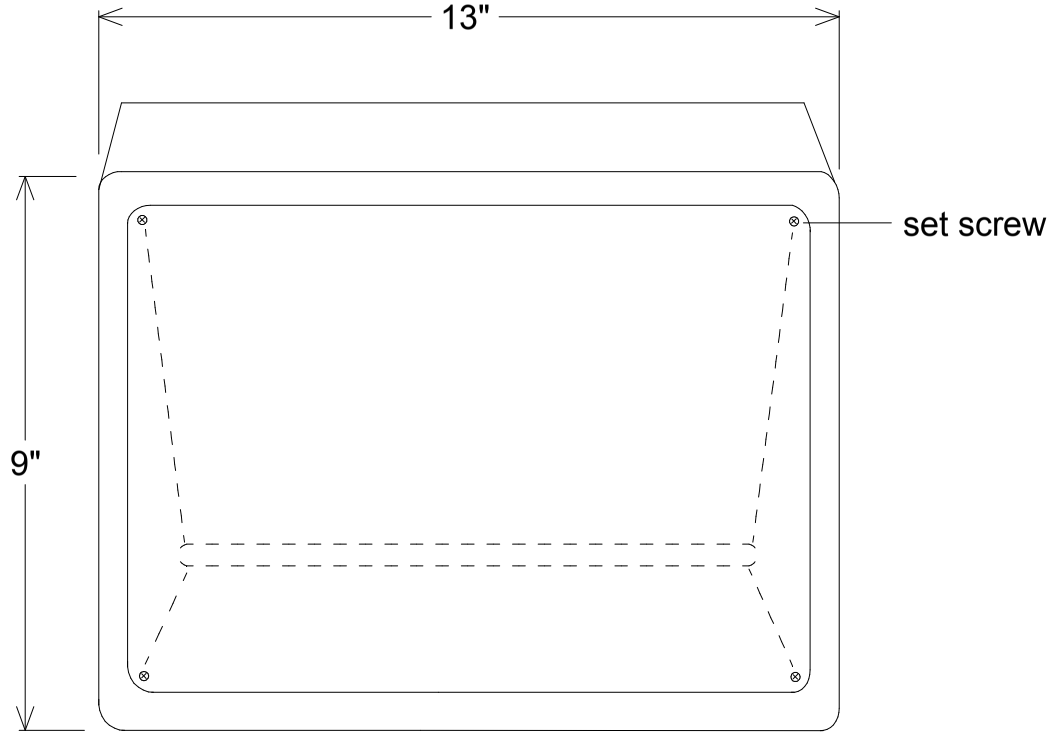

front view

Unless Otherwise Specified:		Name	Date
Dimensions in Inches Tolerances: Fractional ± Angular: Mach ± Bend ± Two Place Decimal ± Three Place Decimal ±	Drawn	T.A.R.	02/09/11
	Checked		
	ENG Appr.		
	MFR Appr.		
	QA		
Construction: aluminum, acrylic	Comments CAD Generated Drawing Do Not Manually Update		

Primelight Mfg. Corp.

3802

35-200 HPS
50-175 MH

Size	Drawing No.	Rev
A	0001	A

Scale	CAD File	Sheet
		1 of 1