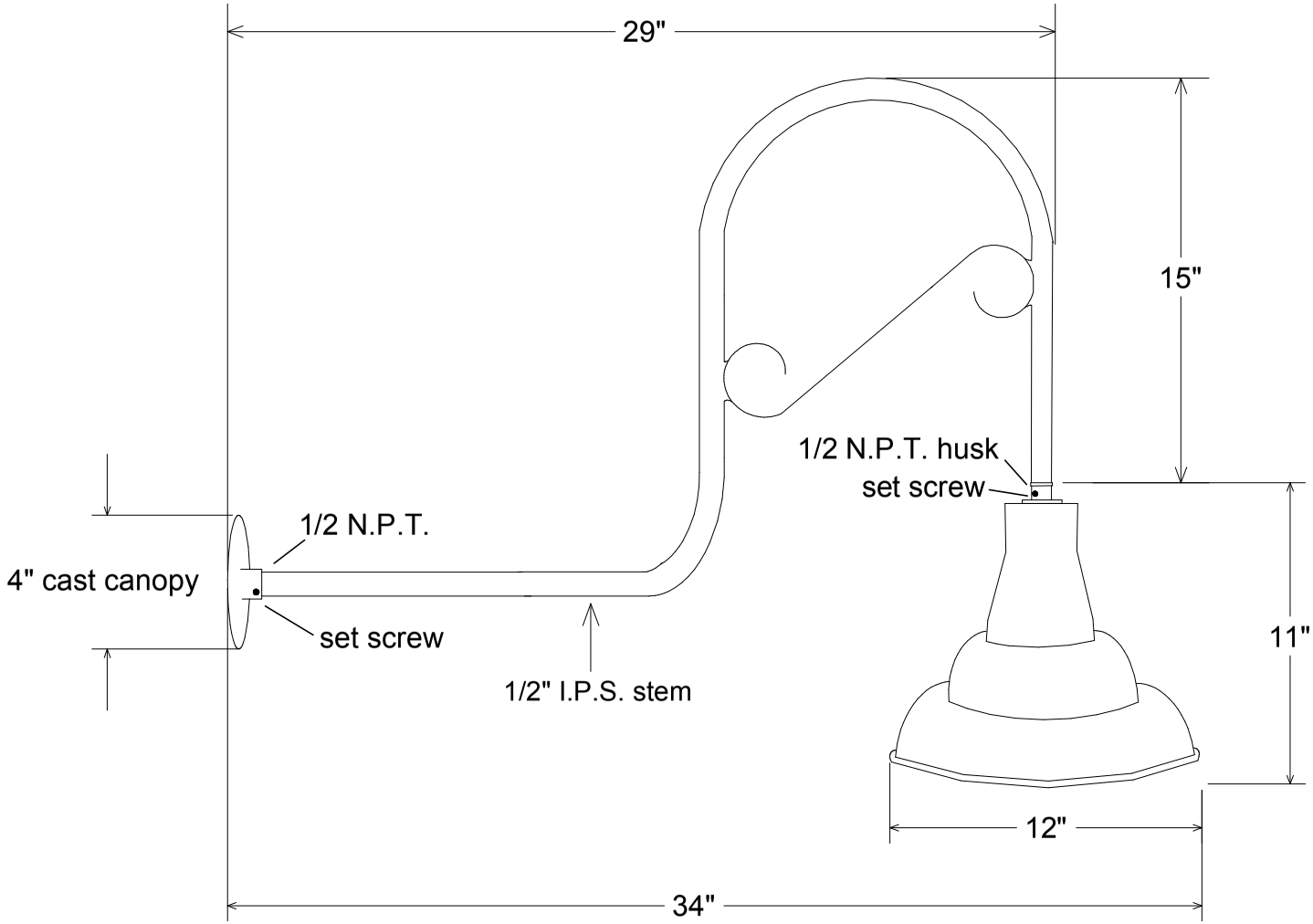

Unless Otherwise Specified:		Name	Date
Dimensions in Inches Tolerances: Fractional ± Angular: Mach ± Bend ± Two Place Decimal ± Three Place Decimal ±	Drawn	T.A.R.	11/17/10
	Checked		
	ENG Appr.		
	MFR Appr.		
	QA		

Construction: All Aluminum

Pipe Size: 1/2"

Lamp: 1-300A

Comments

CAD Generated Drawing
Do Not Manually Update

Primelite Mfg. Corp.

27/851 SCA

Size	Drawing No.	Rev
A	0001	A

Scale	CAD File	Sheet
1:6		1 of 1