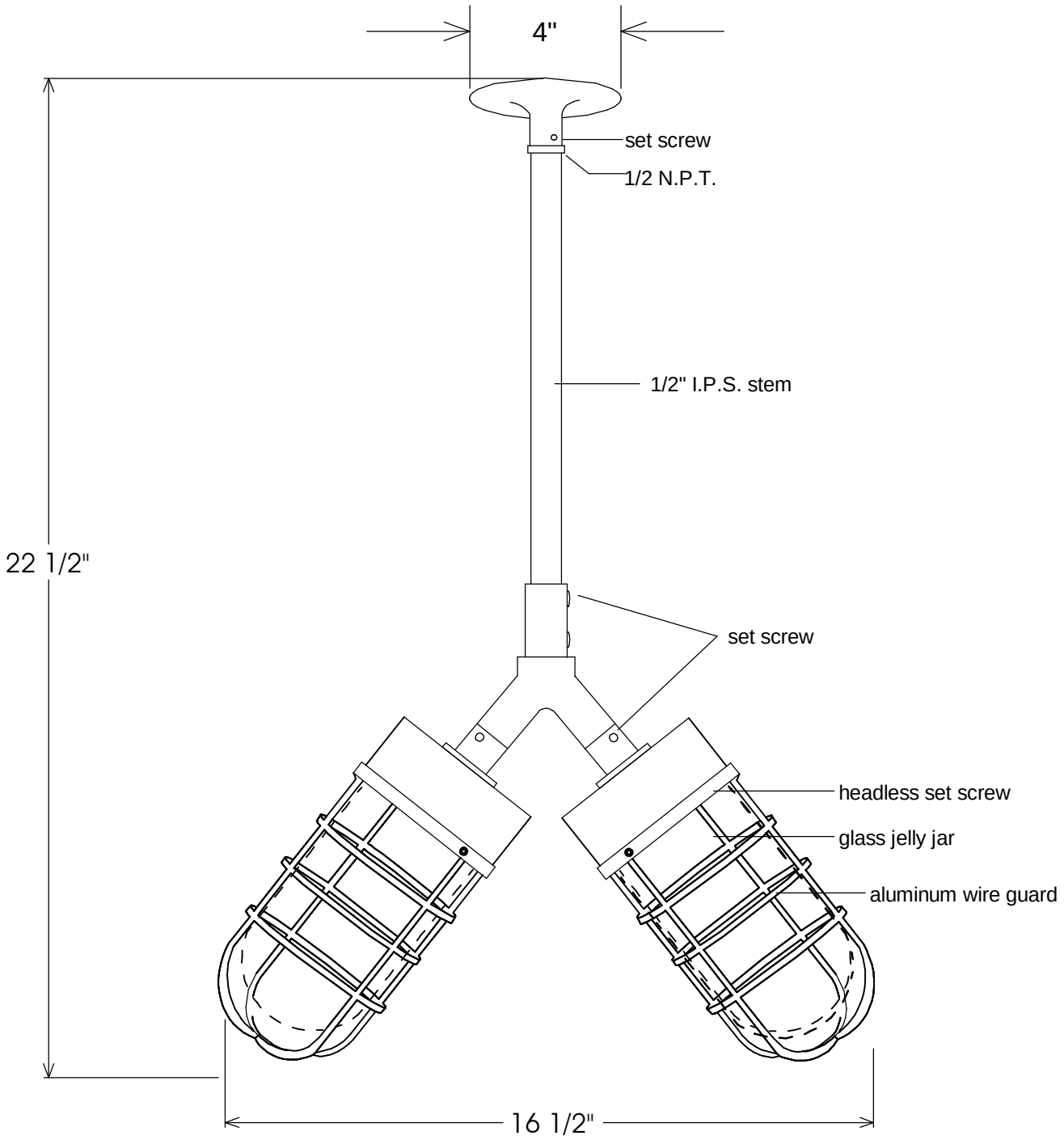

Unless Otherwise Specified:		Name	Date	Primelite Mfg. Corp.
Dimensions in Inches Tolerances: Fractional ± Angular: Mach ± Bend ± Two Place Decimal ± Three Place Decimal ±	Drawn	T.A.R.	01/08/14	26/132-4WG Clear Prismatic Glass
	Checked			
	ENG Appr.			
	MFR Appr.			
	QA			
Construction: aluminum, glass	Comments CAD Generated Drawing Do Not Manually Update			Size: A · Drawing No.: 0001 · Rev: A
Pipe Size: 1/2"				
Lamp: 2-100				Scale: 1:5 · CAD File · Sheet: 1 of 1