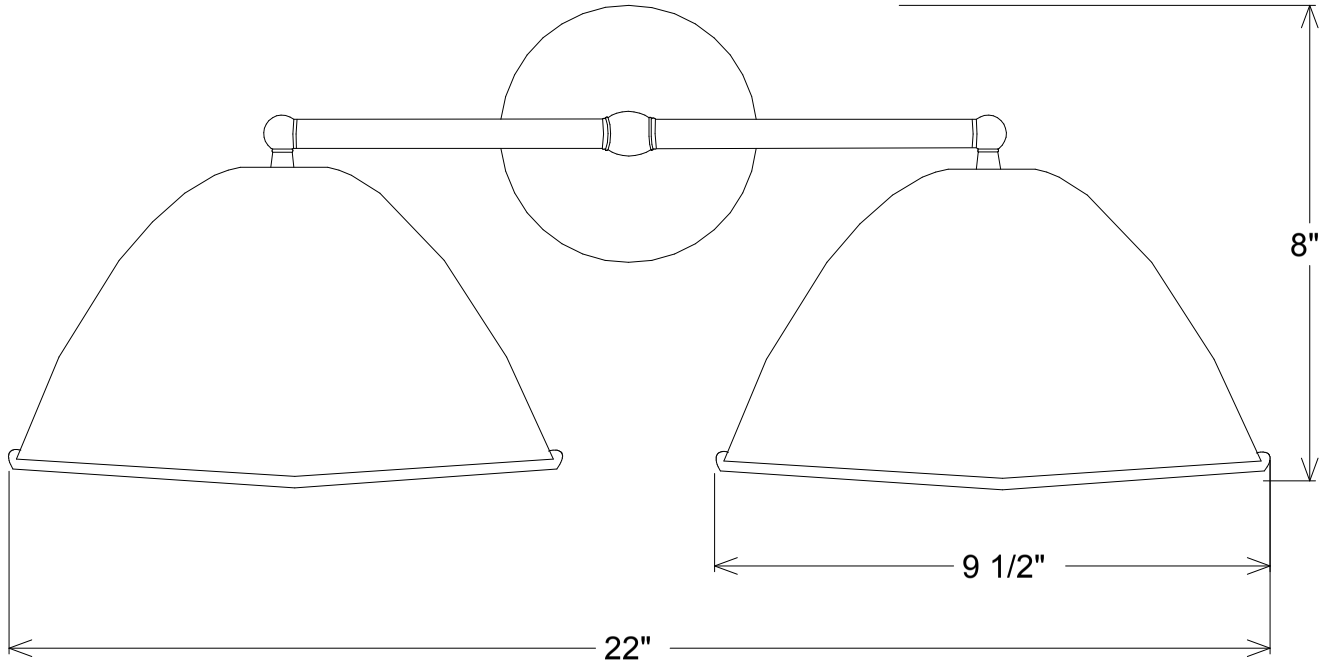

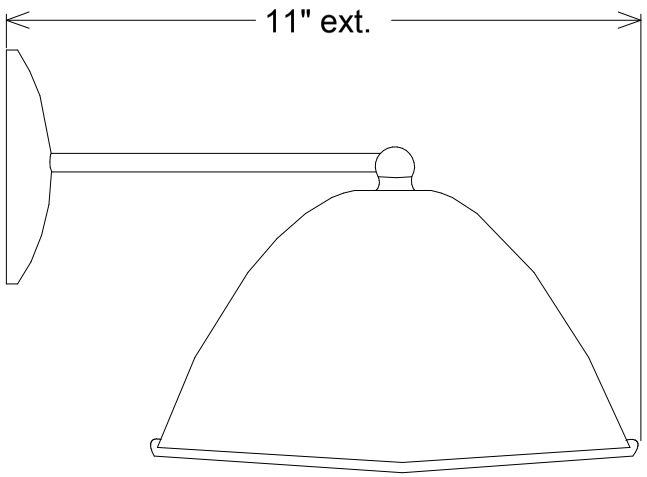

side view

Unless Otherwise Specified:		Name	Date
Dimensions in Inches Tolerances: Fractional ± Angular: Mach ± Bend ± Two Place Decimal ± Three Place Decimal ±	Drawn	T.A.R.	09/08/10
	Checked		
	ENG Appr.		
	MFR Appr.		
	QA		
Construction: All Aluminum	Comments CAD Generated Drawing Do Not Manually Update		
Lamp: 2-100A			

Primelite Mfg. Corp.

24/10-617

Size	Drawing No.	Rev
A	0001	A

Scale	CAD File	Sheet
1:3		1 of 1