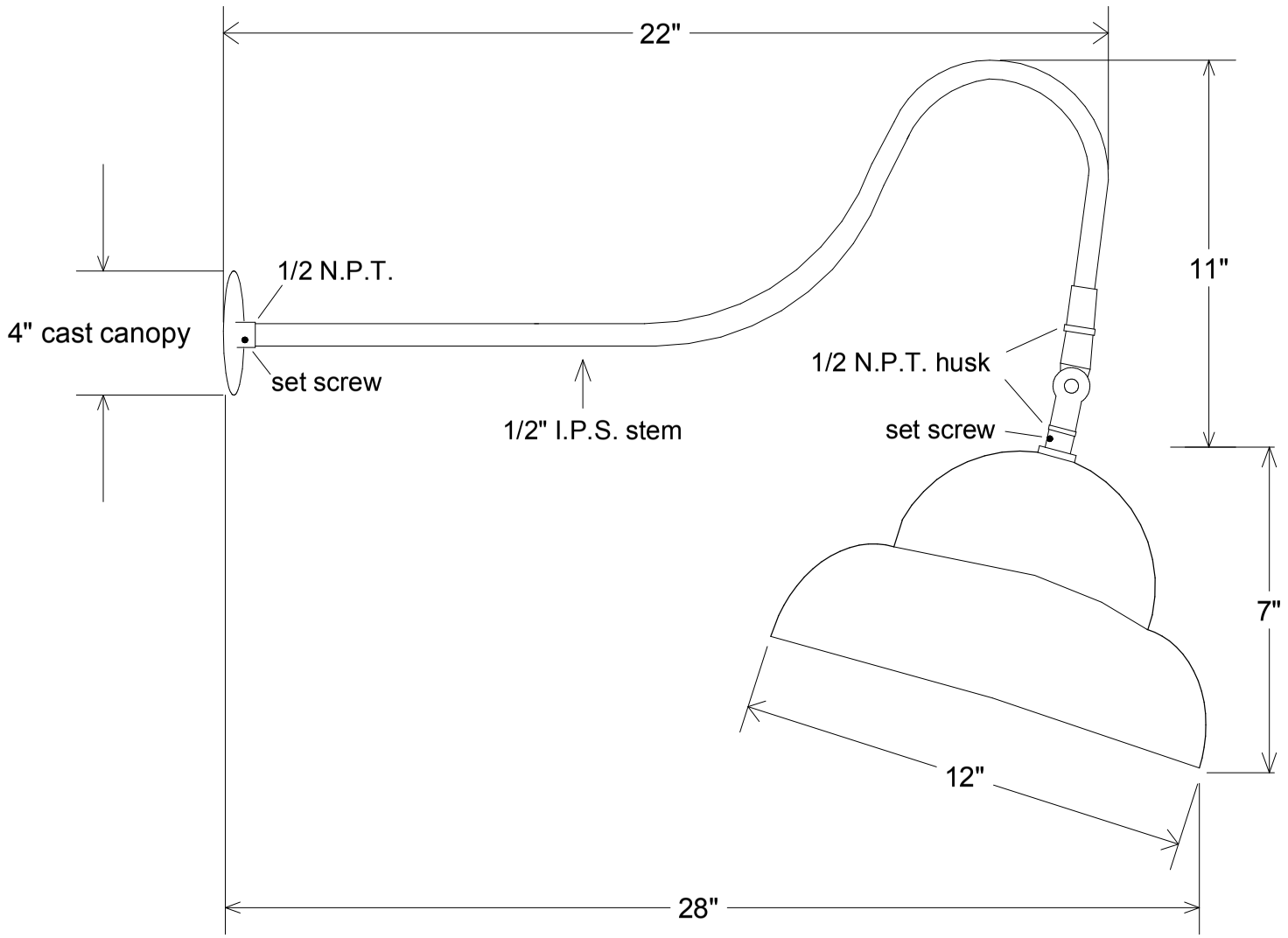

Unless Otherwise Specified:		Name	Date
Dimensions in Inches Tolerances: Fractional ± Angular: Mach ± Bend ± Two Place Decimal ± Three Place Decimal ±	Drawn	T.A.R.	11/19/10
	Checked		
	ENG Appr.		
	MFR Appr.		
	QA		
Construction: All Aluminum	Comments CAD Generated Drawing Do Not Manually Update		
Pipe Size: 1/2"			
Lamp: 1-200A			

Primelite Mfg. Corp.

17/853

Size	Drawing No.	Rev
A	0001	A

Scale	CAD File	Sheet
1:5		1 of 1