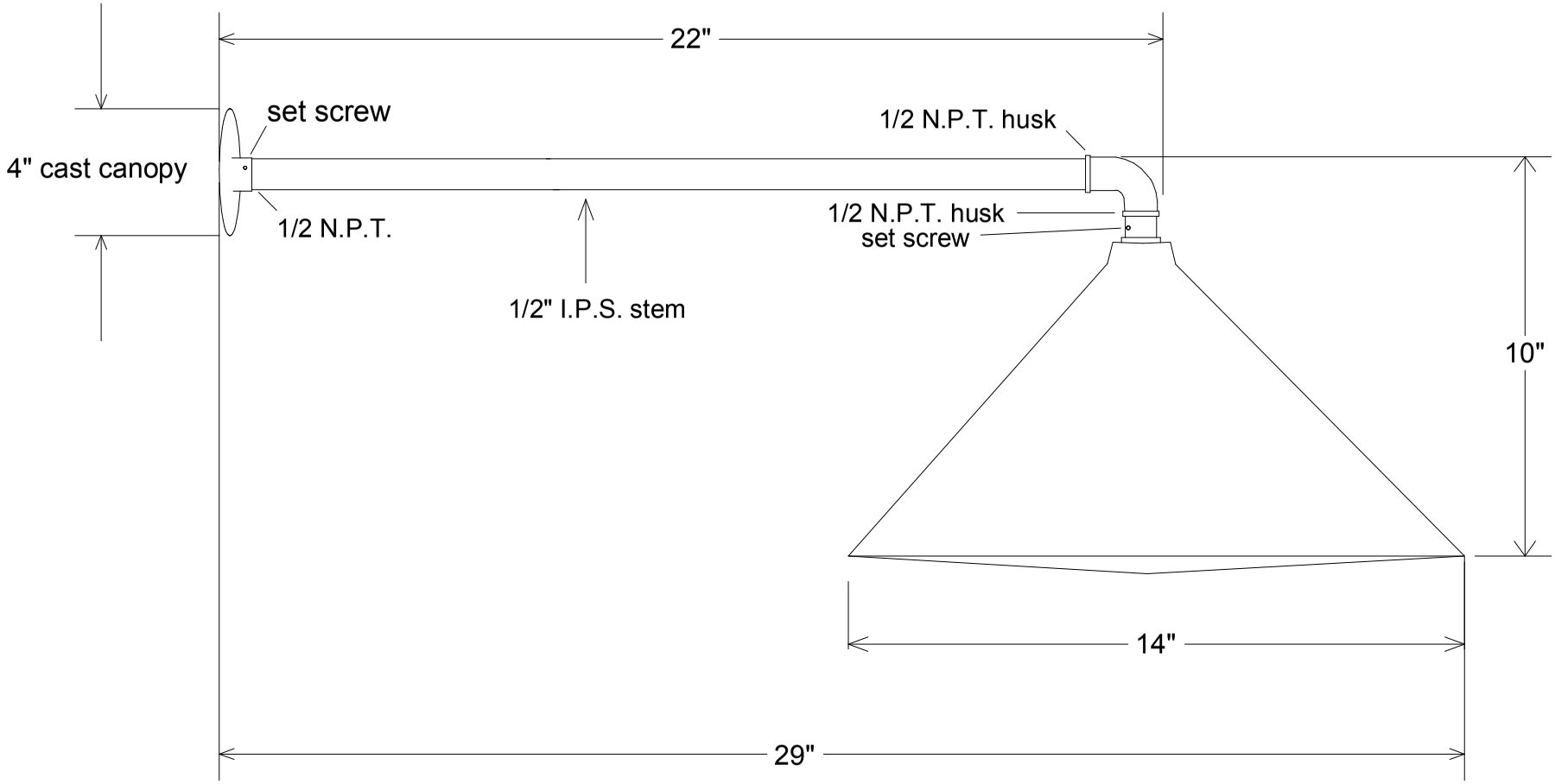


| Unless Otherwise Specified: | | Name | Date |
|---|---|---|---|
| Dimensions in Inches<br>Tolerances: Fractional ±<br>Angular: Mach ± Bend ±<br>Two Place Decimal ±<br>Three Place Decimal ± | Drawn | T.A.R. | 11/23/10 |
| | Checked | | |
| | ENG Appr. | | |
| | MFR Appr. | | |
| | QA | | |
| Construction: All Aluminum | Comments<br>CAD Generated Drawing<br>Do Not Manually Update | | |
| Pipe Size: 1/2" | | | |
| Lamp: 1-150A | | | |

**Primelite Mfg. Corp.**

**111/14-855**

| Size | Drawing No. | Rev |
|---|---|---|
| A | 0001 | A |

| Scale | CAD File | Sheet |
|---|---|---|
| 1:4 | | 1 of 1 |